Premix Ultra Low NOx gas burners

RX 1500 S/E ULN

- Premix gas burners
- Ultra Low NOx emissions (NOx ≤ 30 mg/Nm^3)
- Compact flame (Riello patented combustion head with metal fiber mesh)
- Electronic cam modulation
- Maximum output 1.830 kW
- Average turn-down ratio 1:6
- Firing with pilot flame
- Natural gas operation

The gas burners in the Riello RX S/E ULN range have been designed and developed by Riello with premix combustion technology. They represent the best solutions for low polluting emissions and develop high modulation ratios.
In the RX S/PV ULN burners, the perfect mixture of air and gas is created inside the pipe coupling, upstream of the combustion head. The air/gas mixture is distributed in the combustion head or “support”. It consists of a metal cylinder with dedicated surface holes for mixture outlet.
Thanks to this premix technology, combustion occurs close to the metal mesh and the support, resulting in a very compact flame. It also reduces the probability of contact between the flame and the walls of the combustion chamber. The result is that this head type can be combined with a variety of combustion chambers and is highly flexible when matching equipment.
RX S/E ULN burners offer electronic cam modulating operation (model REC 27.1) for high-precision fuel and combustion air adjustment, thanks to the use of dedicated servo motors.
Maximum air-gas mixture efficiency and output control, guaranteed by the RXS/ ULN burners, combined with the premix combustion head, guarantees low polluting emissions, high combustion efficiency, and high turn-down ratios (on average 7:1). Furthermore, the burner is fired by pilot flame to guarantee regular start up even under conditions with excess air.
The combustion heads of all RX S/E ULN models are equipped with the RRD (Resonance Reduction Device) that minimizes all possible resonance phenomena. The output hole shape has been specifically designed to optimize the air/gas mixture speed to avoid any potential hazard due to flame return across the entire modulating range.

IMPORTANT NOTE:
During the installation of a Riello premix burner in the RX S/E ULN range, a number of parameters must be taken into consideration. These include the boiler type the burner will be installed on, the boiler door thickness, the type of gas used, the frequence of maintenance and service interventions, the stack pressure, etc.
Any order that includes the Riello RX S/E ULN range of burners is the product an in-depth preliminary study of the future of the installation. It is accompanied by a detailed quotation prepared by Riello sales offices and/or technicians.

TECHNICAL DATA

Description	Combustion head	Heat output natural gas		Total electrical power	Electric power supply	Certification	Note	Code
		kW (1)	kW (2)	kW	V/Ph/Hz			
RX 1500 S/E ULN	Included	270-1650	270-1830	6.65	400/3/50	CE-0085CT0448	(3)(4)(5)(6)(7)	**20148878**

Net calorific value of natural gas (G20): 10 kWh/Nm^3.
The burners comply with 2016/426/EU Regulation, 2014/30/EU - 2014/35/EU - 2006/42/EC Directives and EN 676 Standard.
(1) Power range referred to an Ultra Low NOx performance of 30 mg/Nm^3
(2) Power range referred to a Low NOx performance conformingto the Class 3 of EN676 European Standard.
(3) The burners cannot be used on inversion flame boilers.
(4) Gas train must be ordered separately (please see Gas Trains paragraph).
(5) Seal control function is included on Burner Digital Management System, by connection to the dedicated pressure switch included as standard equipment on the gas train.
(6) Direct starter fan motor.
(7) Model with terminal board.

FIRING RATES

Please note: it is important to be aware that in order to achieve an Ultra Low NOx emission performance, it is required to work with a high excess air; as consequence the combustion chamber back pressure could increase up to roughly 30% more.

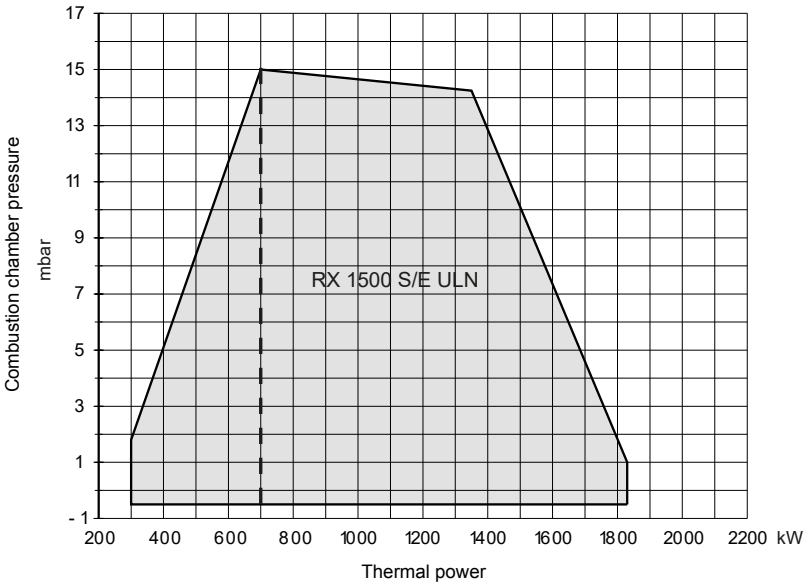

Useful firing rates for choosing the burner

Test conditions conforming to EN676
Temperature: 20 °C
Pressure: 1013,5 mbar
Altitude: 0 m a.s.l.

OVERALL DIMENSIONS

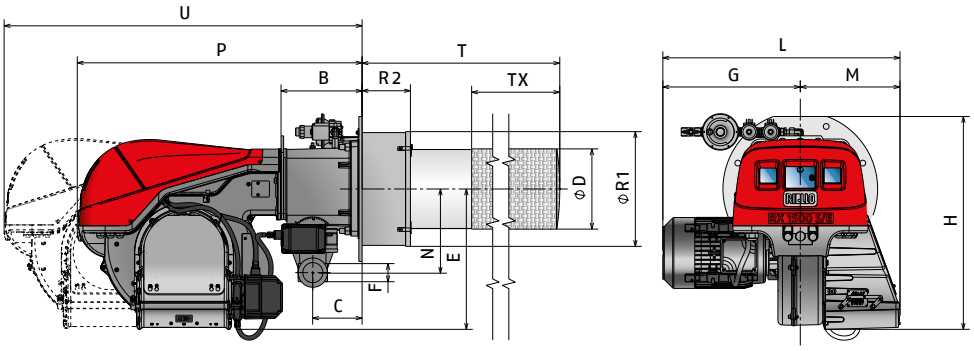

Description	B mm	C mm	D mm	E mm	F mm	G mm	H mm	L mm	M mm	N mm	P mm	R1 mm	R2 mm	T mm	TX mm	U mm
RX 1500 S/E ULN	250	154	250	440	2"	426	660	734	308	260	885	360	150	950	590	1060

TX flame zone length; the non combustion area (T-TX) must be greater than the thickness of the boiler door complete with refractory.

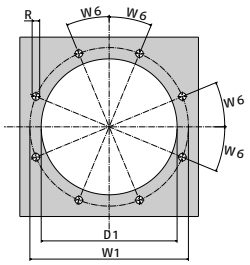

Description	D1 mm	R mm	W1 mm	W6
RX 1500 S/E ULN	370	M16	470	22,5°

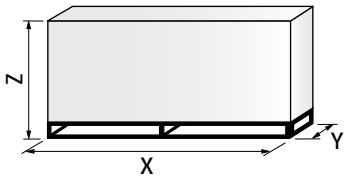

Description	X mm	Y mm	Z mm	Net weight kg
RX 1500 S/E ULN	1930	910	940	130

NOTA: Combustion head is included in the burner box.

GAS TRAINS

Description (1)	Code	Note	Ø Gas train	Valve seal control (2)	Flange kit for gas pressure switch (4)	Burner-gas train adapter (5)
						RX 1500 S/E ULN
VGD SERIES ONE STAGE GAS TRAIN						
VGD 50/1-RT 122	**20137718**		Rp 2”	(3)	20185515	□
VGD 65/1-FT 122	**20140762**	(6)	DN65	(3)	▲	●

(1) Please refer to "GAS TRAIN DESIGNATION".
(2) The valve seal control device is compulsory (conforming to EN 676) on gas trains to burners with a maximum output over 1200 kW.
(3) A gas pressure switch is supplied with the burner for the valve seal control function (to be installed on the gas train and to be connected to the control box of the burner).
(4) Necessary for interface between the gas train and the pressure switch kit supplied with the burner.
(5) The code indicates the adapter necessary for "burner-gas train connection (see "GAS TRAINS ACCESSORIES").
(6) Ø in = DN65; Ø out = DN80.
NOTE: for further information, refer to section “GAS TRAINS FOR BURNERS”.

Key to symbols:
- Gas train not equipped with leak detection control device.
□ Additional adapter not necessary, the gas train may be connected directly to the burner.
● Burner/Gas train matching not available.
▲ Flange kit not required. The gas train can be connected directly to the pressure switch kit supplied with the burner.

ACCESSORIES

Drawing	Burner model	Specification	Code
	RX 1500 S/E ULN	CONTINUOUS VENTILATION KIT If the burner requires continuous ventilation in the stages without flame, a special kit is available.	**3010094**
	RX 1500 S/E ULN	POWER CONTROLLER To obtain modulating operation, the burner requires a regulator with three point outlet controls. The following table lists the accessories for modulating operation with their application range. For remote setpoint use RWF 55. RWF 50.2 - Standard version; 3-point outlet.	**20099869**
		RWF 55.5 - Plus version; complete with RS-485 interface.	**20099905**
	RX 1500 S/E ULN	TEMPERATURE PROBE The temperature probe to be fitted to the power controller must be chosen based on the application. Temperature probe type PT 100 (-100-500 °C).	**3010110**
	RX 1500 S/E ULN	PRESSURE PROBE The pressure probe to be fitted to the power controller must be chosen based on the application. Pressure (0-2.5 bar) with 4-20 mA output.	**3010213**
		Pressure (0-16 bar) with 4-20 mA output.	**3010214**
		Pressure (0-25 bar) with 4-20 mA output.	**3090873**
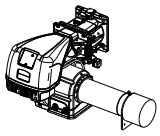	RX 1500 S/E ULN	AIR FILTER When burner is used in dusty environment, in order to prevent the possible ingress of foreign elements in the air circuit, a filter is available as accessory to be installed in the air intake side of the burner. Because the RIELLO combustion head is made by mesh, and not fiber, the grade of filtration can be lower, allowing to lengthen filter cleaning time, so reducing cost and to fully exploit the potential of the ventilating structure, assuring in the meantime a correct combustion. The air filter specifically studied for RIELLO RX S/E ULN burners is easily cleanable with compressed air in order to avoid the need to change it each time the maintenance is required. The use of air filter involves a working field reduction, please refer to the instruction manual for detailed info.	**20164652**
	RX 1500 S/E ULN	PC INTERFACE KIT To connect the control box to a personal computer for the transmission of operation, fault signals and detailed service information, an interface adapter with PC software are available.	**3010436**

STATE OF SUPPLY

Monoblock forced draught Premix Ultra Low NOx gas burner with two stage progressive or modulating operation, with a specific kit, fully automatic, made up of:

- Cylindrical flame shape premix combustion heads fitted with:
  - highly heat resistant cylinder
  - special metallic fiber mesh resistant to thermal stress
  - ignition electrodes
- Double combustion control devices, made up of:
  - temperature probe which controls the temperature inside the combustion head to prevent damage tothe combustion head
  - UV flame sensor
- Pilot Ignition system to assure a high ignition reliability
- Microprocessor-based Digital Burner Management System
  - manages all the safety phases of the burner
  - allows to modify the operation point of the burner
  - with diagnostic functions for operational status and fault messages
- AZL display Interface, operating unit to adjust the system
- Fan with asynchronous motor
- Air suction circuit lined with sound-proofing material
- Air damper for air flow setting and butterfly valve for regulating fuel output controlled by independent stepper motor actuators
- Burner on/off selection switch
- Low gas pressure switch to cause controlled safety shut-down when the supply pressure falls below a pre-determined value
- Maximum gas pressure switch to stop the burner in the case of excess pressure on the fuel supply line
- Minimum air pressure switch stops the burner in case of insufficient air quantity at the combustion head
- No. 2 air pressure switches, light indicators, relays and fuses that set up the air intake filter (air filter is an accessory to be ordered separately)
- Relays with clean contacts for signaling the burner is operating or the burner's lock-out
- Fixing flange with insulating panel
- Flame inspection window
- Slide bars for easier installation and maintenance
- Electric protection level IP44

STANDARD EQUIPMENT

- Insulating screen
- Gas train adapter
- Gas train for pilot ignition system
- Instruction booklet
- Spare parts list